Stanwade Metal Products, Inc.
6868 State Route 305 PO Box 10
Hartford, Ohio 44424
Phone: 800-826-5243 Fax. 1-330-772-3307
www.tankstore.com

Tank For Stationary Use Only

Capacity 6,000 Gallons
Design Dike/Rainshield
Code UL 142
Test Pres. 5 PSI

Heads Primary 1/4"
Shell Primary 1/4"
Heads Secondary
Shell Secondary

Dike/Rainshield: 1/4"
Dike Capacity: 6600 Gallons

Paint Ext. Red Primer
Paint Int.
Weight Empty 14,125 lbs.
Rev.# Date:

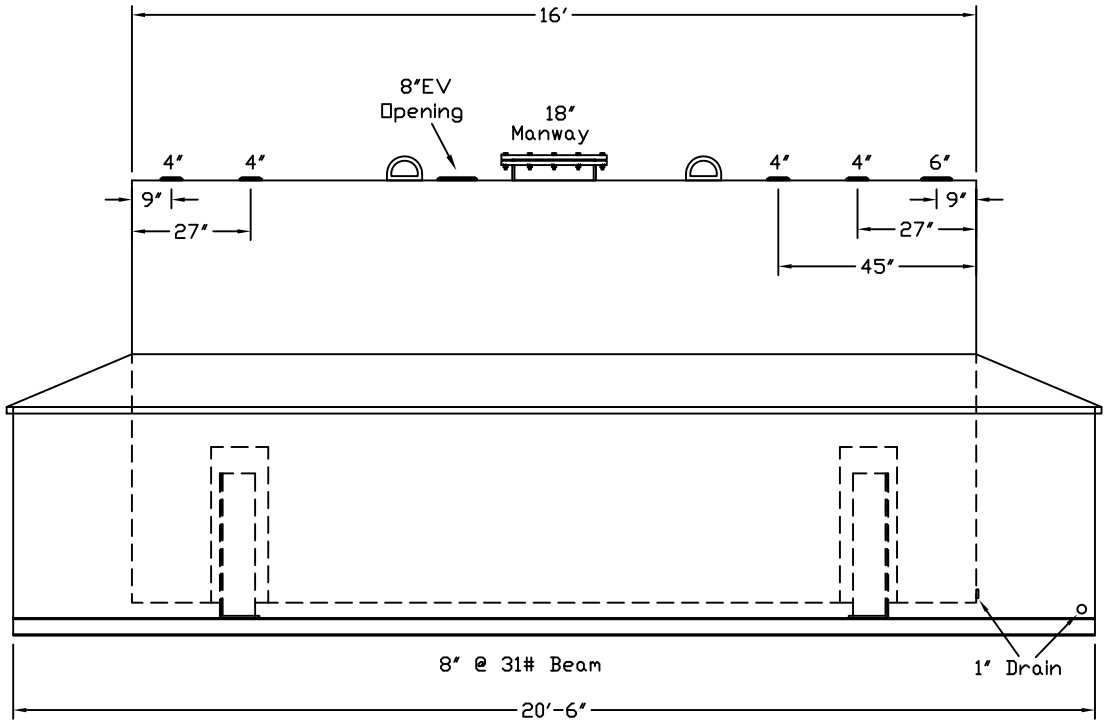

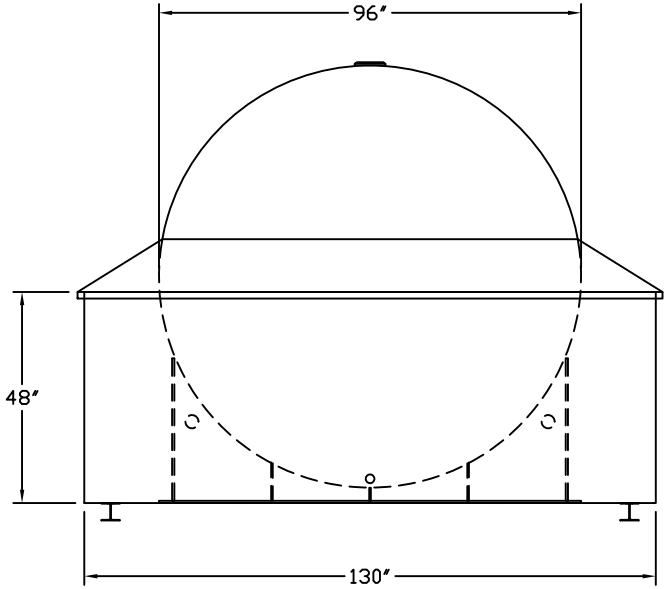

Customer:_____ Drg. Date: _____

Quoted Lead Times Begin Upon Receipt of signed Approved Drawing, Which Must be Returned Before Production Can Begin.

Drawing Approved By:

_____