Stanwade Metal Products, Inc.
6868 State Route 305 PO Box 10
Hartford, Ohio 44424
Phone: 800-826-5243 Fax. 1-330-772-3307
www.tankstore.com

Tank For Stationary Use Only

Capacity 520 Gallons
Design Singlewall Crossangle
Code UL 142
Test Pres. 5 PSI

Heads Primary 12 Gauge
Shell Primary 12 Gauge
Heads Secondary
Shell Secondary

Paint Ext. Red Primer
Paint Int.
Weight Empty 550 lbs.
Rev.#
Date:

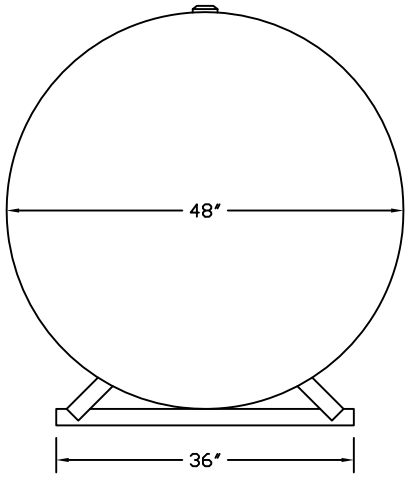

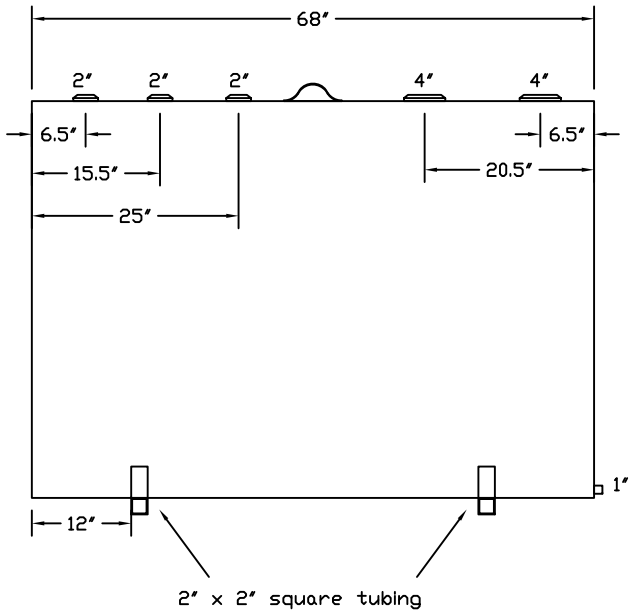

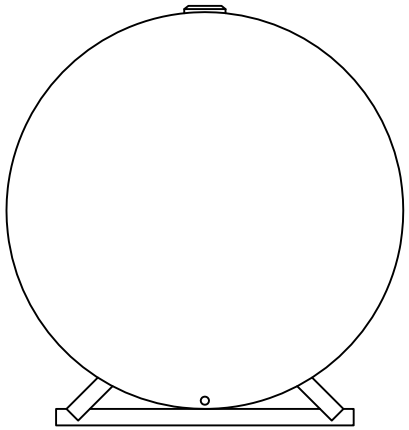

Customer:_____ Drg. Date: _____

Drawing Approved By:

_____

Quoted Lead Times Begin Upon Receipt of signed Approved Drawing, Which Must be Returned Before Production Can Begin.