Stanwade Metal Products, Inc.
6868 State Route 305 PO Box 10
Hartford, Ohio 44424
Phone: 800-826-5243 Fax. 1-330-772-3307
www.tankstore.com

Tank for stationary use only

Capacity 1,500 Gallons
Design AG Singlewall
Code UL 142
Test Pres. 5 PSI

Heads Primary 7 Gauge
Shell Primary 7 Gauge
Heads Secondary
Shell Secondary

Paint Ext. Red Primer
Paint Int.
Weight Empty 3,600 lbs.
Rev.# Date:

Dike is 1/4" construction

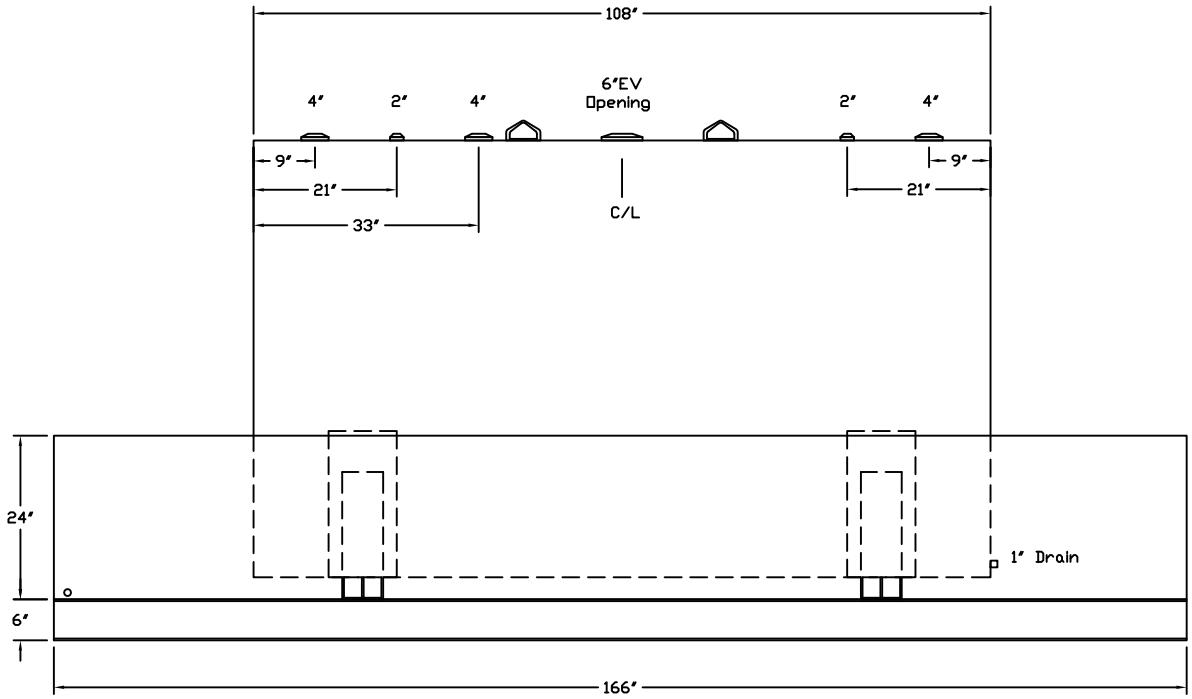

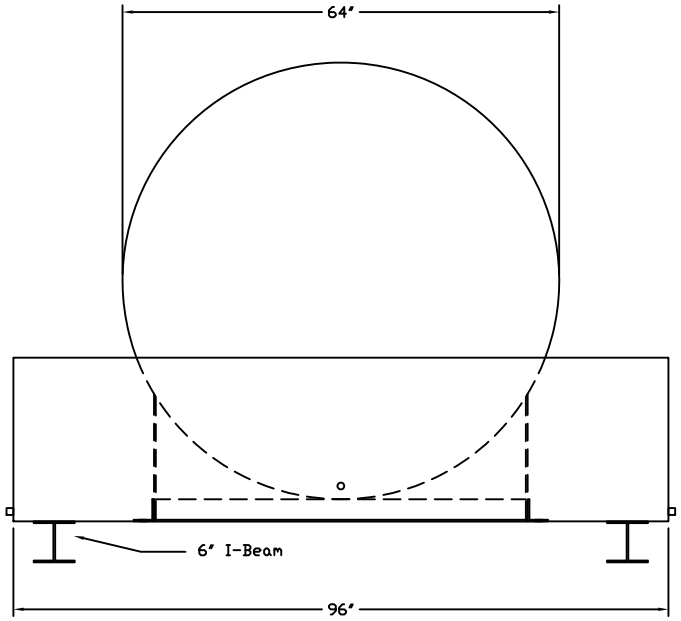

Customer:_____ Drg. Date: _____

Quoted Lead Times Begin Upon Receipt of signed Approved Drawing, Which Must be Returned Before Production Can Begin.

Drawing Approved By:

_____