Stanwade Metal Products, Inc.
6868 State Route 305 PO Box 10
Hartford, Ohio 44424
Phone: 800-826-5243 Fax. 1-330-772-3307
www.tankstore.com

Tank For Stationary Use Only

Capacity	4,000 Gallons	Heads Primary	7 Ga.	Paint Ext.	Red Primer
Design	Double Wall AG	Shell Primary	7 Ga.	Paint Int.	
Code	UL 142	Heads Secondary	7 Ga.	Weight Empty	6,550 lbs.
Test Pres.	5 PSI	Shell Secondary	10 Ga.	Rev.#	Date:

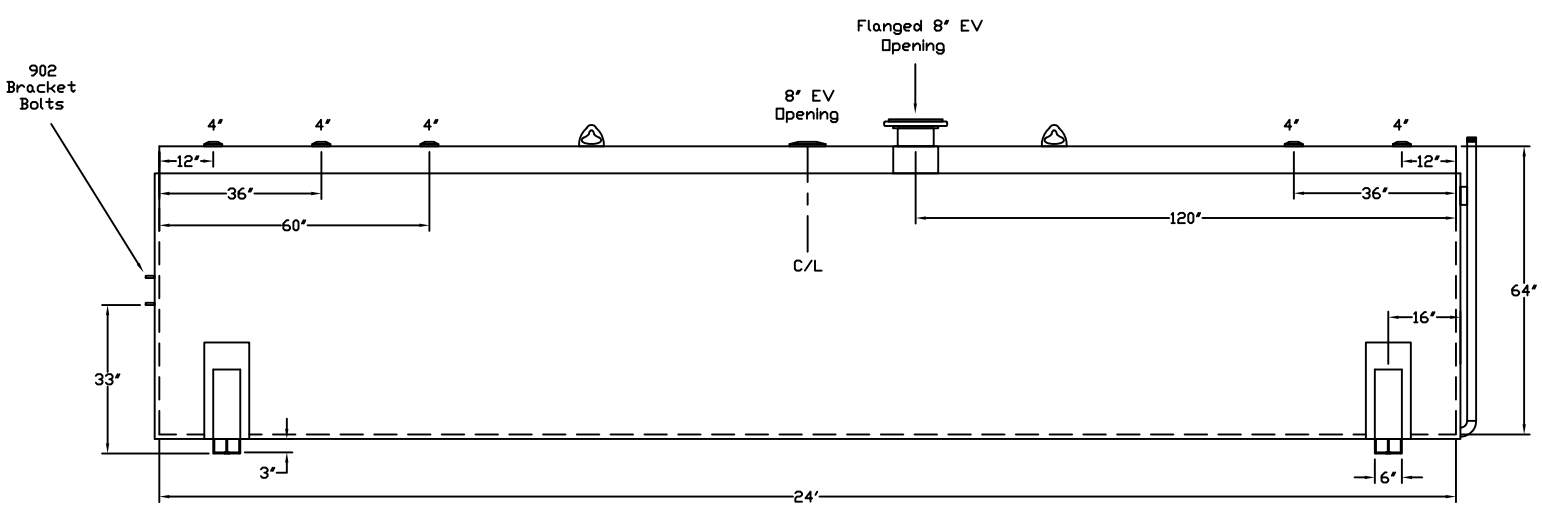

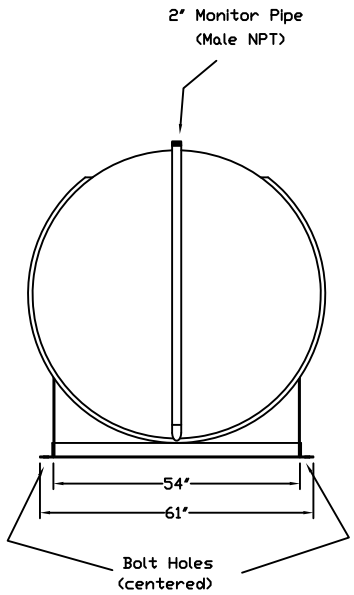

Customer:_____ Drg. Date: _____

Drawing Approved By:

_____

Quoted Lead Times Begin Upon Receipt of signed Approved Drawing, Which Must be Returned Before Production Can Begin.