Stanwade Metal Products, Inc.
6868 State Route 305 PO Box 10
Hartford, Ohio 44424
Phone: 800-826-5243 Fax. 1-330-772-3307
www.tankstore.com

Tank For Stationary Use Only

FLAMESHIELD
Tested to NFPA 30A Fire-Resistant Tank Requirements

Capacity 20,000 Gallons
Design AG Dual Wall
Code UL 142 Flameshield
Test Pres. 5 PSI

Heads Primary 1/4"
Shell Primary 1/4"
Heads Secondary 1/4"
Shell Secondary 7 Ga.

Paint Ext. White Urethane
Paint Int. _____
Weight Empty 27,000 lbs.
Rev.# Date:

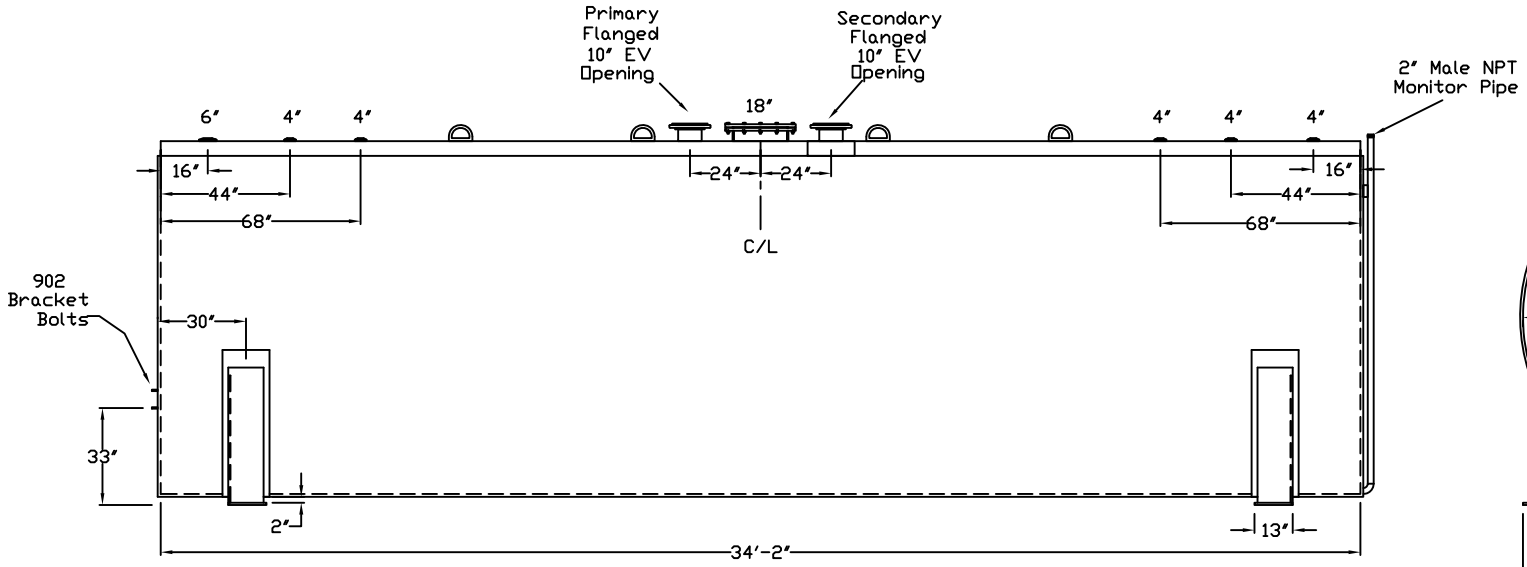

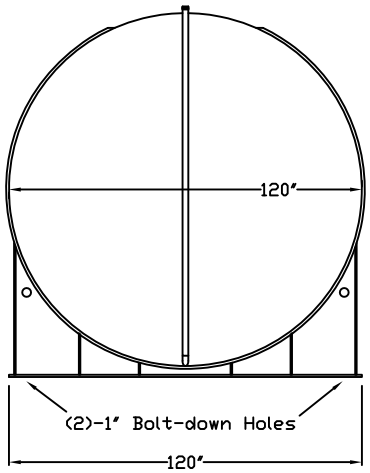

Customer:_____ Drg. Date: _____

Quoted Lead Times Begin Upon Receipt of signed Approved Drawing, Which Must be Returned Before Production Can Begin.

Drawing Approved By:

_____